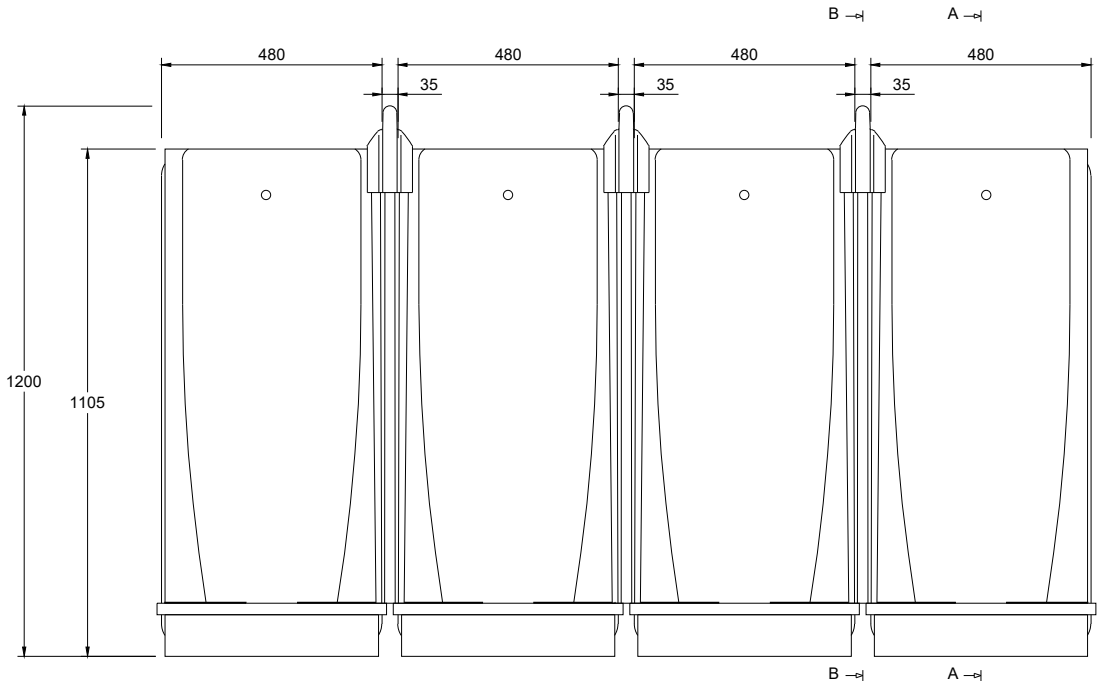

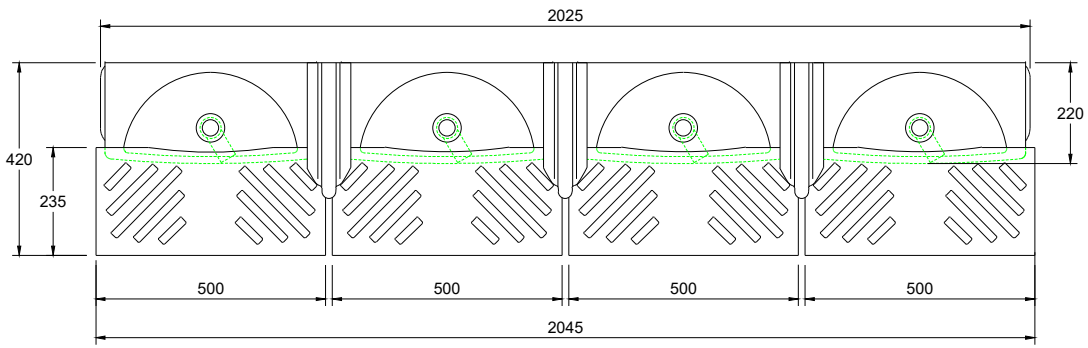

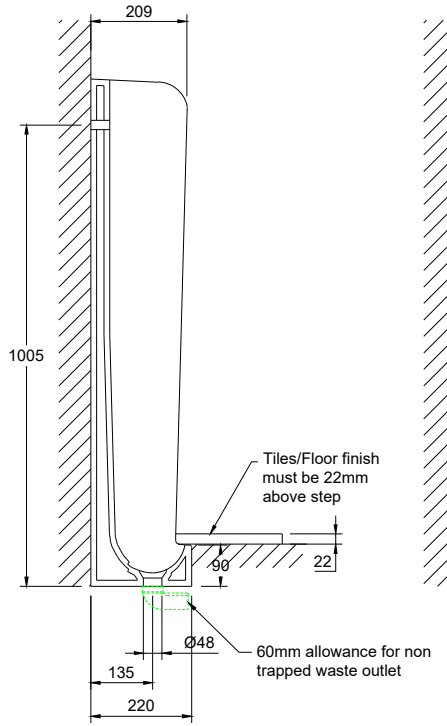

Section AA

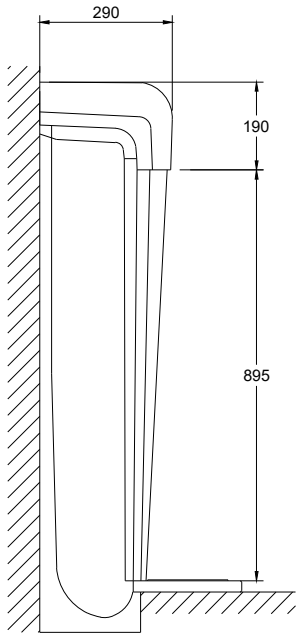

Section BB

DO NOT SCALE DRAWING

REV	DATE	COMMENT

TITLE:
Healey & Lord 4 Station Back Inlet Niagara Floor Standing Slab Urinal Fused Run with Foot Plates

WEIGHTS PER COMPONENT:
Urinal - 40.4kg
Joining Strip - 3.1kg
Joining Elbow - 2.4kg
Footplate - 5.6kg

NOTES:
- All dimensions in mm
- Component part dimensions ± 5mm

MATERIAL: Vitreous China
Colour: White

PRODUCT CODE: HL1342

PAPER: A4

DATE: 22/08/2019

SCALE: NTS

HEALEY & LORD
A MAG Group Company

Website: www.hlwashrooms.co.uk
Tel: 01603 558855
Email: sales@hlwashrooms.co.uk
Address: HL Washrooms, MAG Building,
Vulcan Road South, Norwich, Norfolk, NR6 6AF